DATE	DESCRIPTION OF CHANGE	REV
2021-07-01	XXXXXXXX	A

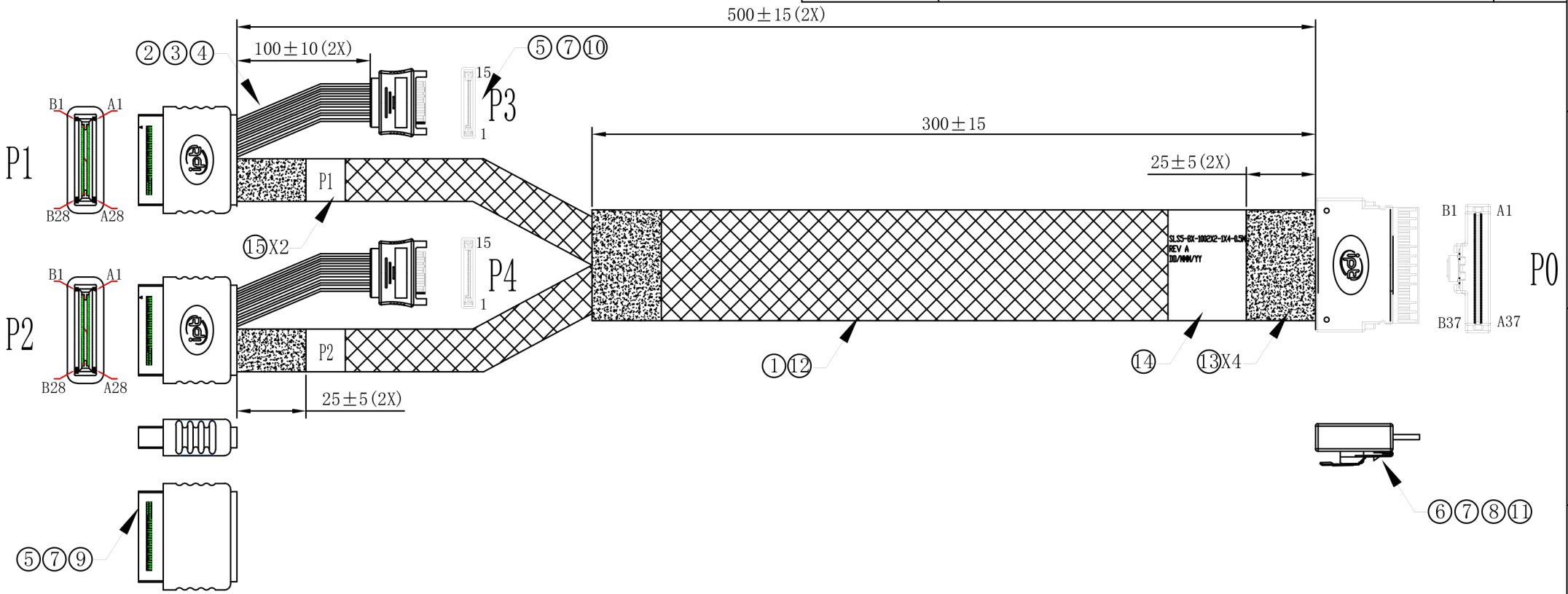

NO.	NAME	IPT NO.	DESCRIPTION	Q'TY	UNIT
⑮	LABEL		WHITE LABEL,L W=10*30 P1 or P2	2	PCS
⑭	LABEL		WHITE LABEL,L W=40*40	1	PCS
⑬	ACETATE TAPE		W=25MM ACETATE TAPE,BLACK	170	MM
⑫	WEAVE		W=12MM PLASTIC BRAID SLEEVE,PET,BLACK	700	MM
⑪	CLIPS		SFF-8654 SPECIAL CIRCULAR SHRAPNEL (UNIVERSAL)	1	PCS
⑩	CONNECTOR		SATA15P MALE HEAD ON BOTH SIDES WIDE LUG /F	1	PCS
⑨	PCB		SFF-1002 1C 56PIN PCB	1	PCS
⑧	PCB		SFF8654 SF6IB8X04 8X STRAIGHT 0.68 PAD 92 OHM IPTLOGO	1	PCS
⑦	Outer Shell		Black core material PBT	-	G
⑥	INNER MOLD		HIGH DENSITY INTERNAL MOLD MATERIAL	-	G
⑤	INNER MOLD		COMMON INTERNAL MOLD MATERIAL	-	G
④	CABLE		UL1007 18AWG BLACK ELECTRONIC CABLE	200	MM
③	CABLE		UL1061 30AWG BLACK ELECTRONIC WIRE	400	MM
②	CABLE		UL1061 30AWG YELLOW ELECTRONIC WIRE	200	MM
①	CABLE		SAS CABLE:(30AWG*2C+2D)+HM,95Ω	1200	MM

NOTE:
1.ELECTRICAL PERFORMANCE SHOULD MEET THE PCIE GEN5 CABLE SPEC.
2.THE CABLE ASSEMBLY SHALL MEET BELOW IMPENDANCE REQUIREMENT:
TERMINATION AREA:85±15% OHMS,CABLE ABSOLUTE AREA:85±10% OHMS.
3.THE CABLE ASSEMBLY SHALL BE ROHS2.0 COMPLIANT.
4.THE MARKING ON THIS PRODUCT DOESN'T CONTAIN ENVIRONMENTAL HAZARDOUS MATERIALS PER DIRECTIVE 2011/65/EU FOR ROHS COMPLIANCE.

serial CABLES

TITLE	X8 SlimSAS 74P TO *2 X4 MCIO Female					SHEET	1/2
CUSTOMER		CUSTOMER P/N		SLS5-8X-1002X2-1X4-0.5M		DRAWING	JackeyYuan
DWG NO.	WIPT20210701002	UNIT	SCALE	REV	VIEW	CHECKED	lupeng
IPT P/N		mm	NONE	A		APPROVAL	

DATE	DESCRIPTION OF CHANGE	REV
2021-07-01	XXXXXXXX	A

P0	GND	A1
	PERp0	A2
	PERn0	A3
	GND	A4
	PERp1	A5
	PERn1	A6
	GND	A7
	BP_TYPEA(VSPA)	A8
	CWAKEA#,DBFFA(VSPA)	A9
	GND	A10
	REFCLKA+(VSPA+)	A11
	REFCLKA-(VSPA-)	A12
	GND	A13
	PERp2	A14
	PERn2	A15
	GND	A16
	PERp3	A17
	PERn3	A18
	GND	A19
	GND	B1
	PETp0	B2
	PETn0	B3
	GND	B4
	PETp1	B5
	PETn1	B6
	GND	B7
	BP_TYPEA(VSPA)	B8
	CWAKEA#,DBFFA(VSPA)	B9
	GND	B10
	REFCLKA+(VSPA+)	B11
	REFCLKA-(VSPA-)	B12
	GND	B13
	PETp2	B14
	PETn2	B15
	GND	B16
	PETp3	B17
	PETn3	B18
	GND	B19

A19	GND	P1
A18	PERp0	
A17	PERn0	
A16/A22	GND	
A21	PERp1	
A20	PERn1	
A19/A16	GND	
A15	REFCLKp1	
A14	REFCLKn1	
A13/B16	GND	
B15	REFCLKP0	
B14	REFCLKN0	
B13/A25	GND	
A24	PERp2	
A23	PERn2	
A22/A28	GND	
A27	PERp3	
A26	PERn3	
A25	GND	
B19	GND	
B18	PETp0	
B17	PETn0	
B16/B22	GND	
B21	PETp1	
B20	PETn1	
B19	GND	
A7	SMClk	
A8	SMDat	
A9	SMBRST#	
B10	ePerst0#	
A12	PRSNT0#	
A25	GND	
A24	PETp2	
A23	PETn2	
B22/B28	GND	
B27	PETp3	
B26	PETn3	
B25/B13	GND	SHORT 30AWG
B9	Dual Port EN#	
B12	PWRDIS	
A11	PERST1#/CLKREQ#	

P0	GND	A19
	PERp4	A20
	PERn4	A21
	GND	A22
	PERp5	A23
	PERn5	A24
	GND	A25
	BP_TYPEA(VSPA)	A26
	CWAKEA#,DBFFA(VSPA)	A27
	GND	A28
	REFCLKA+(VSPA+)	A29
	REFCLKA-(VSPA-)	A30
	GND	A31
	PERp6	A32
	PERn6	A33
	GND	A34
	PERp7	A35
	PERn7	A36
	GND	A37
	GND	B19
	PETp4	B20
	PETn4	B21
	GND	B22
	PETp5	B23
	PETn5	B24
	GND	B25
	BP_TYPEA(VSPA)	B26
	CWAKEA#,DBFFA(VSPA)	B27
	GND	B28
	REFCLKA+(VSPA+)	B29
	REFCLKA-(VSPA-)	B30
	GND	B31
	PETp6	B32
	PETn6	B33
	GND	B34
	PETp7	B35
	PETn7	B36
	GND	B37

A19	GND	P2
A18	PERp0	
A17	PERn0	
A16/A22	GND	
A21	PERp1	
A20	PERn1	
A19/A16	GND	
A15	REFCLkp1	
A14	REFCLkn1	
A13/B16	GND	
B15	REFCLkp0	
B14	REFCLkn0	
B13/A25	GND	
A24	PERp2	
A23	PERn2	
A22/A28	GND	
A27	PERp3	
A26	PERn3	
A25	GND	
A24/B19	GND	
B18	PETp0	
B17	PETn0	
B16/B22	GND	
B21	PETp1	
B20	PETn1	
B19	GND	
A7	SMClk	
A8	SMDat	
A9	SMBRST#	
B10	ePerst0#	
A12	PRSNT0#	
B25	GND	
B24	PETp2	
B23	PETn2	
B22/B28	GND	
B27	PETp3	
B26	PETn3	
B25/B13	GND	SHORT 30AWG
B9	Dual Port EN#	
B12	PWRDIS	
A11	PERST1#/CLKREQ#	

NOTE:B9,A11 PIN OF P1/P2 IS OPEN

P3/P4		P1/P2	
1,2,3	30AWG YEL	B11	3.3V
4,5,6	30AWG BLK	B13	GND
10,11,12	30AWG BLK	A13	GND
13,14,15	18AWG BLK	B1-B6	12V

WIRE DIAGRAM

LABEL INFORMATION

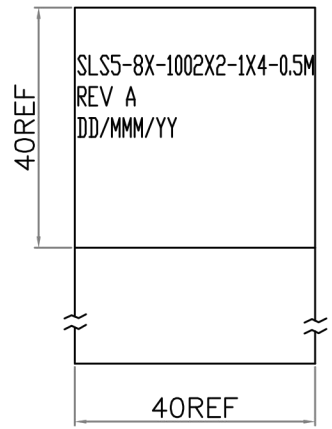

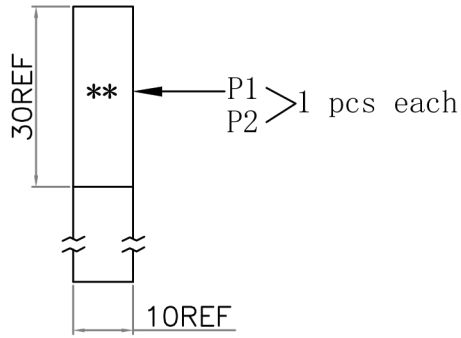

serial CABLES

TITLE	X8 SlimSAS 74P TO *2 X4 MCIO Female					SHEET	2/2
CUSTOMER		CUSTOMER P/N		SLS5-8X-1002X2-1X4-0.5M		DRAWING	JackeyYuan
DWG NO.	WIPT20210701002	UNIT	SCALE	REV	VIEW	CHECKED	lupeng
IPT P/N		mm	NONE	A		APPROVAL	