| DWG NO. | SH | REV |
|---|---|---|
| C-NEVDDF-S699 | 1 | 1.0 |

| TABLE 1 | | | |
|---|---|---|---|
| | LENGTH "A" | SERIAL CABLES P/N | SERIAL CABLES REV |
| | 500 ±10 | PCI4-4409-0.5M | T.B.D. |

| REVISIONS | | | | | | |
|---|---|---|---|---|---|---|
| ZONE | REV. | ECN NUMBER | DESCRIPTION | BY | DATE | APPROVED |
| | 1.0 | | INITIAL DESIGN | FH | 04/29/2020 | RN |

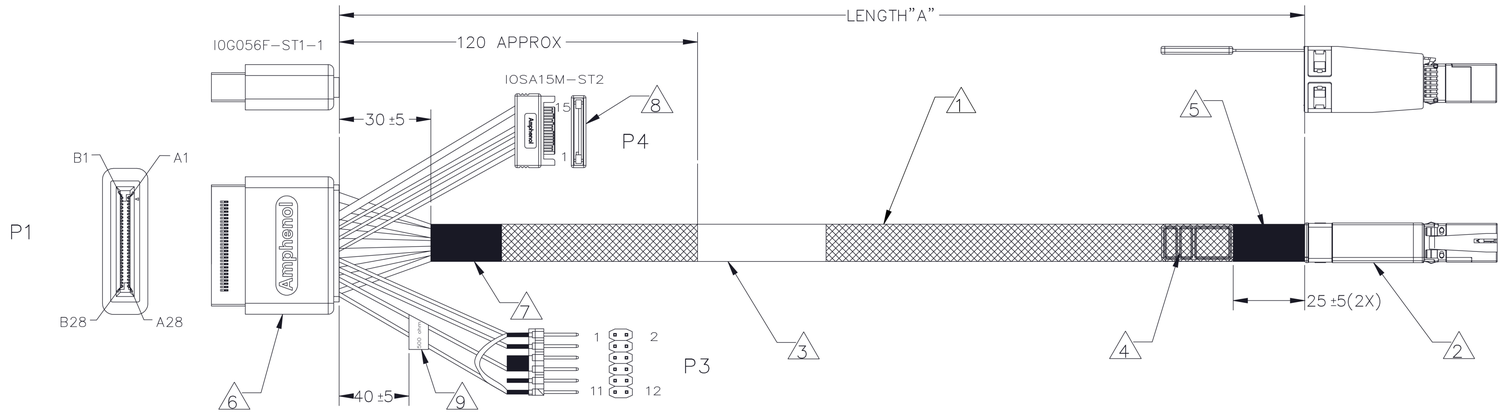


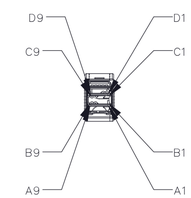


TYP PINOUT

| TABLE 2 | |
|---|---|
| ITEM No. | DESCRIPTION |
| 1 | 30 AWG, SINGLE PAIR, UL20744 85ohm VW-1 HF |
| 2 | PLUG, HDMSAS - REFERENCE SFF-8644 |
| 3 | LABEL, WRAPPED - P/N & REV, DATE CODE, LENGTH, COUNTRY OF ORIGIN AND SERIAL NUMBER |
| 4 | LANYARD, HDMSAS, GREEN, UL, 94-0 |
| 5 | ACETATE CLOTH TAPE |
| 6 | SFF 1002 1C PCBA(HEPCB56XXX + HCGZ56F001) |
| 7 | TERYLENE CLOTH TAPE, T=0.11mm , BLK , R2 , HF |
| 8 | SATA CONN:15P, M, BRS, Au15, LCP, VO, BLK, HF |
| 9 | LABEL:SYNTHETIC PAPER , 50*7MM, WHT, BLANK, R2 |

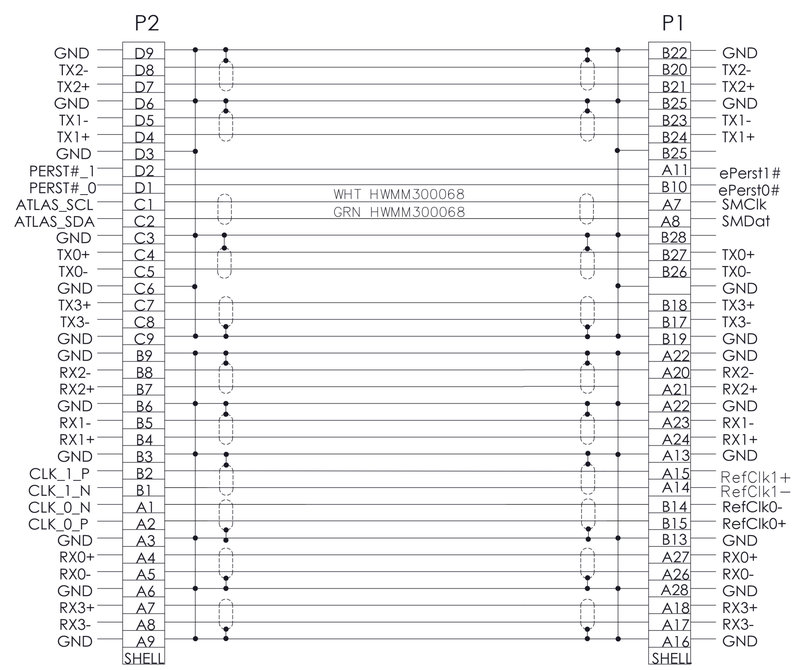


| P1 | | | P3 | |
|---|---|---|---|---|
| Signal | pin | 30 AWG WHT | pin | |
| DUALPORTEN# | B9 | 30 AWG ORG | 3 | |
| 3.3Vaux | B11 | 30 AWG BLK | 5,6,7,8 | LABEL: 500 OHM |
| GND | B13 | 30 AWG WHT | 1,2,11,12 | |
| SMBRST# | A9 | 30 AWG WHT | 4 | |
| PWRDIS | B12 | | 9 | |

| P1 | | | P4 | |
|---|---|---|---|---|
| B4 | 12V | 24AWG YEL | 13 | 12V |
| B5 | 12V | 24AWG YEL | 14 | 12V |
| B6 | 12V | 24AWG YEL | 15 | 12V |
| B2 | 12V | | | |
| B3 | 12V | | | |
| B1 | 12V | | | |
| B11 | 3.3Vaux | 30AWG YEL | 1,2,3 | 3.3V |
| | | | | |
| A1,A2,A3 | GND | 24AWG BLK | 4,5,6 | GND |
| A5,A6,A7 | GND | 24AWG BLK | 10,11,12 | GND |

6. ALL MATERIALS USED IN THE MANUFACTURE OF THIS ASSEMBLY SHALL COMPLY WITH AMPHENOL REGULATED MATERIALS SPECIFICATION ACS-1152.
5. CABLE ASSEMBLIES, COMPONENTS AND SUB-COMPONENTS SHALL BE COMPLIANT TO EU DIRECTIVE 2011/65/EU-RoHS2.
4. CABLE ASSEMBLIES SHALL BE COMPLIANT TO PCI 3.0 SPECIFICATION AT MINIMUM.
3. CABLE ASSEMBLIES SHALL BE TESTED PER SPECIFICATIONS AND PROCEDURES.
2. CABLE ASSEMBLIES, COMPONENTS, SUB-COMPONENTS, MATERIALS AND MFG PROCESSES MUST MEET SPECIFICATIONS.
1. THIS DRAWING IS RESERVED FOR SERIAL CABLES (REFERENCE CUSTOMER DRAWING PCI4-4409-0.5M).

NOTES: UNLESS OTHERWISE SPECIFIED

Amphenol RoHS 2011/65/EU

| TOLERANCES | | DWN | 04/29/2020 FH |
|---|---|---|---|
| 0.0 | ± 0.1 | CHK | 04/29/2020 RN |
| 0.00 | ± 0.08 | APVD | 04/29/2020 MA |
| 0.000 | ± - | | |
| ANGLES | ± 1.0° | | |

UNLESS OTHERWISE SPECIFIED DIMENSIONS ARE IN MM

INTERPRET PER ASME Y14.5

CODE IDENT 31413

CUSTOMER USE DRAWING

serial CABLES

TITLE: CABLE ASSY, 4X, HDMSAS TO SFF-1002 CONNECTOR, PASSIVE, 85Ω, PCIe 16G, 30 AWG (FOR U.3)

PART NO.: SEE TABLE 1 — REV: N/A

DRAWING NO.: C-NEVDDF-S699 — REV: 1.0

SIZE: D — SCALE: 1:1 — SHEET 1 OF 1

DWG NO. C-NEVDDF-S699 — SH 1 — REV 1.0

AHSP_szD_mm.drwdot Rev01/201409